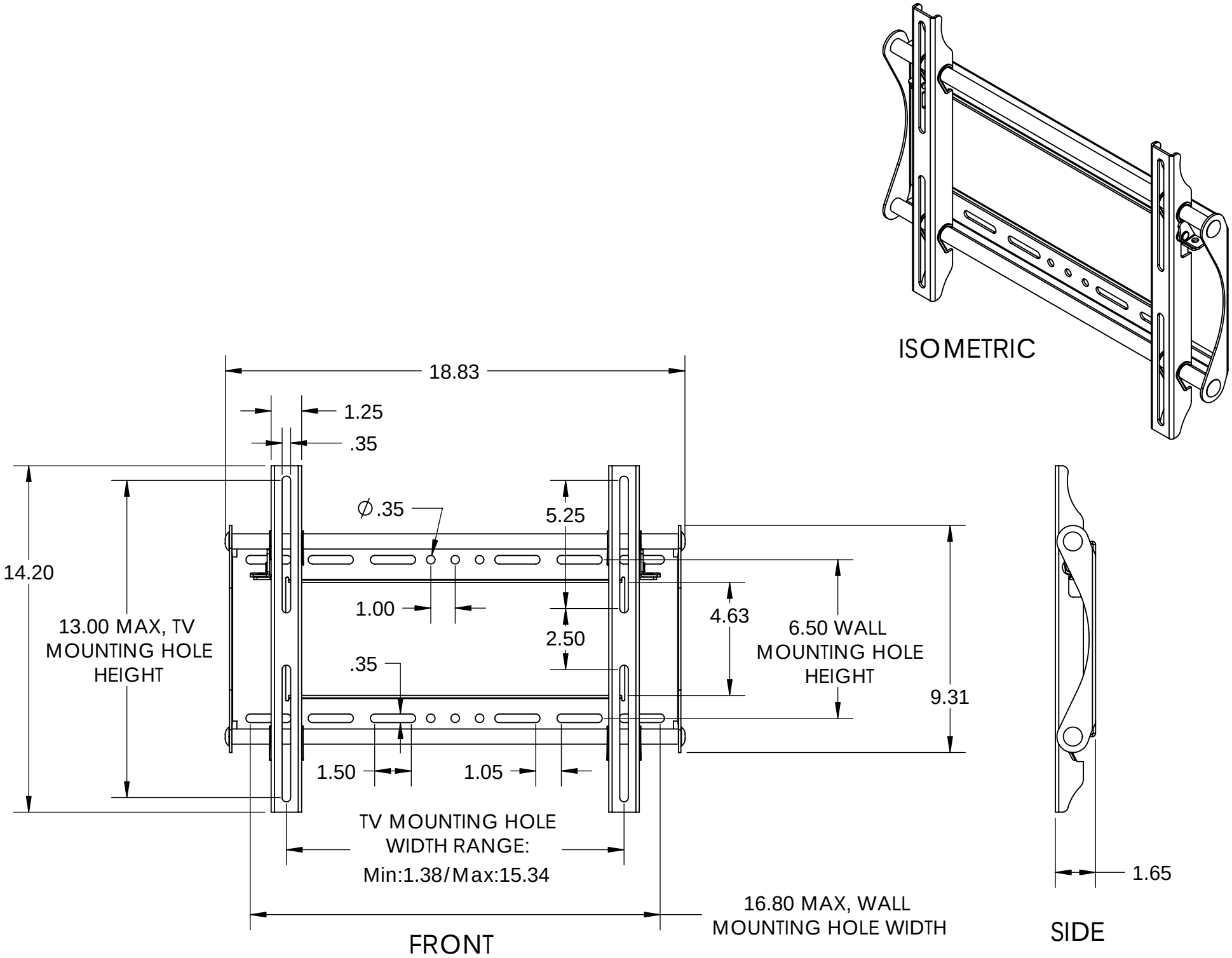
ISOMETRIC
18.83
1.25
.35
14.20
13.00 MAX, TV
MOUNTING HOLE
HEIGHT
∅.35
5.25
1.00
2.50
.35
4.63
6.50 WALL
MOUNTING HOLE
HEIGHT
9.31
1.50
1.05
TV MOUNTING HOLE
WIDTH RANGE:
Min:1.38/Max:15.34
16.80 MAX, WALL
MOUNTING HOLE WIDTH
FRONT
1.65
SIDE